+386 (0)59 071 390
prodaja@minitec.si
25.11.2026

C-SECTION RAIL 30

Code: 320220/0

C-profile 30 is a guide profile that ensures reliable reception and smooth movement of trolleys for heavy tools and cable systems.

Link to the product →

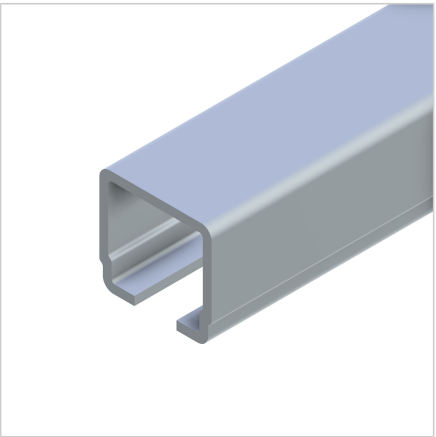



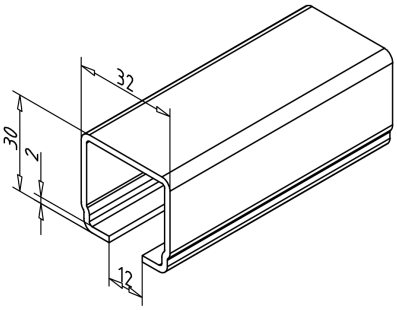

Technical data/items supplied

- Steel, galvanized
- I_x = 2.42 cm^4
- I_y = 1.45 cm^4
- w_x = 3.802 cm^3
- w_y = 2.821 cm^3
- IT = 6.623 cm^4
- ESD-compatible
- Weight = 1.560 kg/m
- Bar length = 6 m

Applications

- Reception and guide of cable trolleys
- Reception and guide of tool trolleys to provide heavy tools

Assembly

- Attach to portal structure with rail holder **part no.** 320222/0