+386 (0)59 071 390
prodaja@minitec.si
23.11.2026

CANTAINER - SWIVEL CANTILEVER, 3-FOLD

Code: 320877/0

Holder for 3 screw boxes with a movable arm allows flexible material placement and improves workplace ergonomics.

Link to the product →



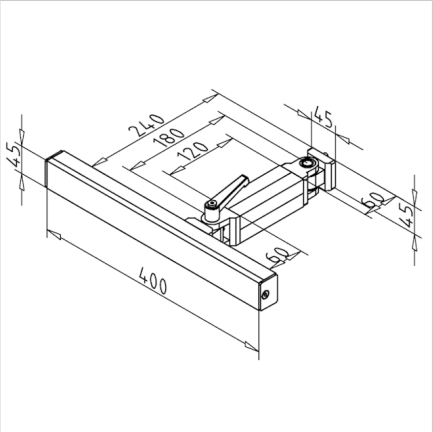

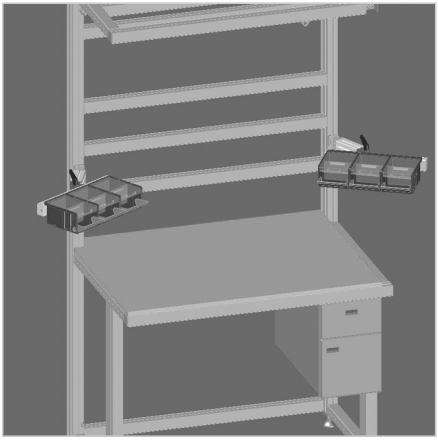

Technical data/items supplied

- Profile 45 x 32 F and 45 x 45 F
- heavy duty joint and swivel joint with clamping lever with supplied hardware
- Load capacity: max.= 100 N
- Weight = 1.916 kg/piece

Applications

- Accepting 3 KanTainers

Assembly

- Mount the heavy load hinge on the table