+386 (0)59 071 390
prodaja@minitec.si
24.11.2026

CONDUIT 27 AL

Code: 201051/0

Aluminum cable duct for profiles series 30 designed for efficient cable organization and protection in aluminum constructions.

Link to the product →

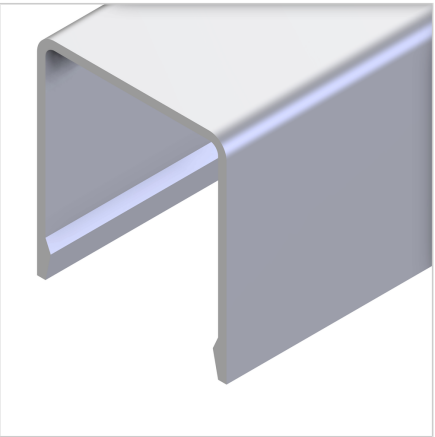

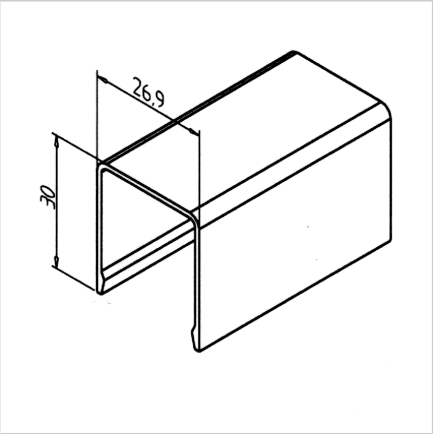



Technical data/items supplied

- Aluminium, extruded, anodized E6/EV1
- Weight = 0.193 kg/m
- Bar length = 6 m

Applications

- Cover for cables and pneumatic hoses

Assembly

- Earthing brackets for optional grounding **part no.** E90141/0 can be used
- Clip onto clamp **Art. no.**221212/0