+386 (0)59 071 390
prodaja@minitec.si
23.11.2026

COVER PROFILE 30

Code: 221185/0

Cover profile 30 in grey for aesthetic and protective finishing of aluminium profiles in series 30.

Link to the product →

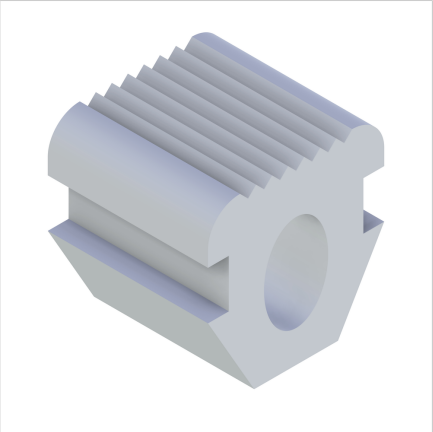

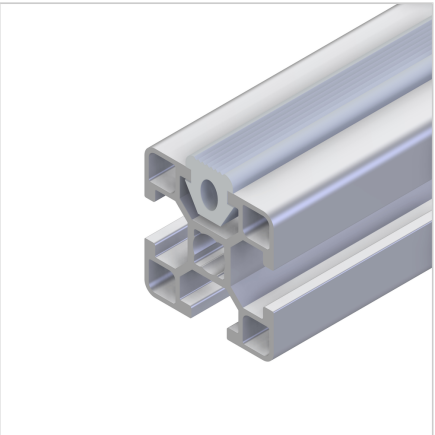

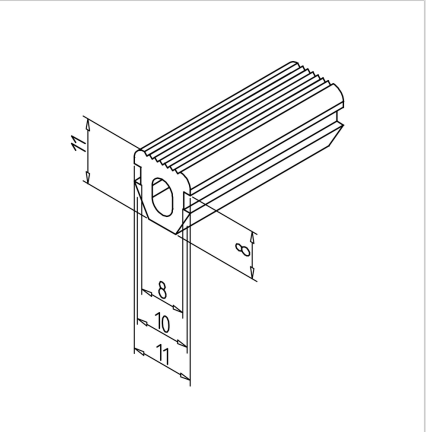

Technical data/items supplied

- EPDM, grey
- Hardness (Shore A) 70°
- Roll length 50 m
- Weight = 0.087 kg/m

Applications

- Material shelves
- Edge Protection
- Support plates

Assembly

- Press into profile groove
- Suitable for the profiles of the profile series 30