+386 (0)59 071 390
prodaja@minitec.si
23.11.2026

DOUBLE PANEL CLAMPING PROFILE

Code: 201018/0

Link to the product →

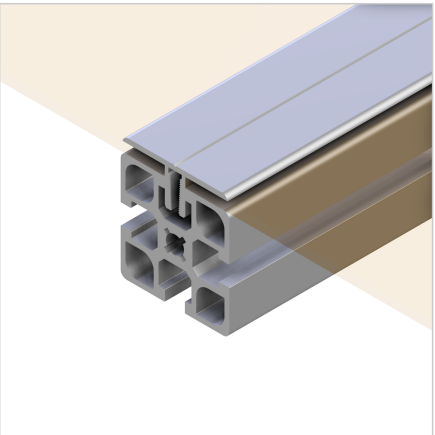

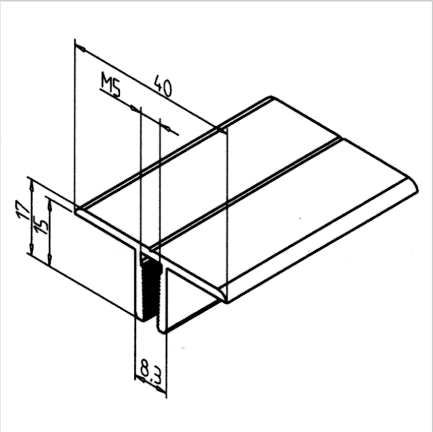

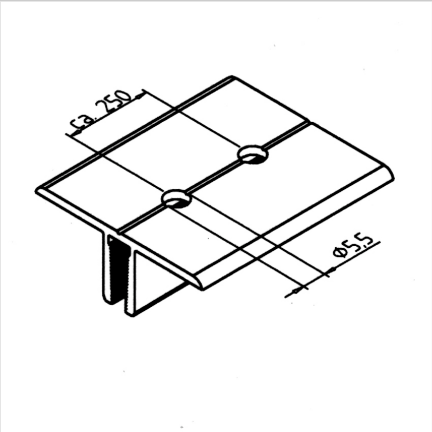

Technical data/items supplied

- Aluminium, extruded, anodized E6/EV1
- Weight = 0.375 kg/m
- Bar length = 6 m

Applications

- Attachment of panels on the outer face in the region of a butt joint
- Reception of surface elements with a maximum strength of 10 mm

Assembly

- Make bore Ø 5.5 mm for setscrew M5 in grid size of approx. 250 mm
- Press in the profile groove and clamp with grub screw M5 x 12 **part no.** 21.1381/0
- See also surface clamping profile **part no.** 201025/0