+386 (0)59 071 390
prodaja@minitec.si
24.11.2026

EDGE PROTECTION FOR CONDUIT 45 AL

Code: 221117/1

Edge protection for conduit 45, preventing edge damage and extending duct lifespan.

Link to the product →

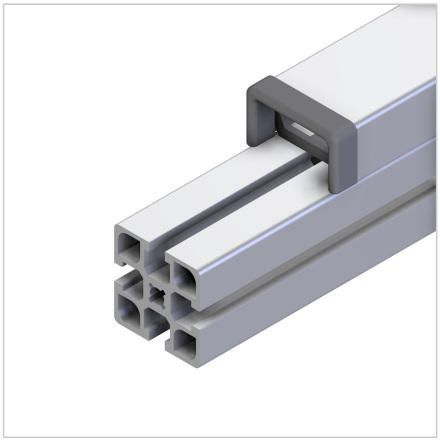

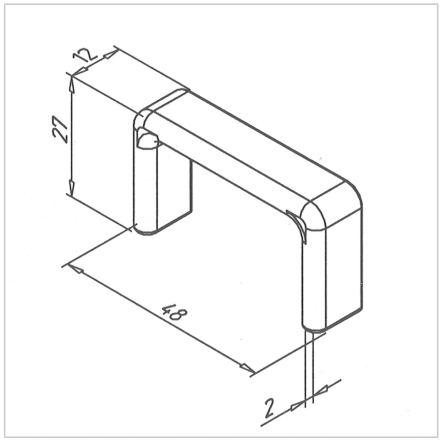

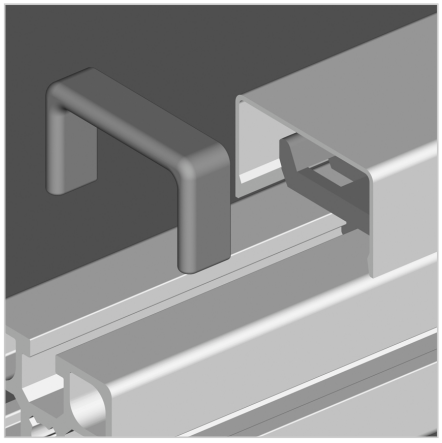

Technical data/items supplied

- ABS, Injection Mould, grey
- Weight = 0.005 kg/piece

Applications

- Edge protection for Cabel Canal 45 AL

Assembly

- Simply push onto the end of the cable duct