+386 (0)59 071 390
prodaja@minitec.si
23.11.2026

# GUIDE PROFILE 3 GREY L=2m

Code: 221075/1

Guide profile 3 for stable and quiet sliding of three panels in window assemblies.

Link to the product →

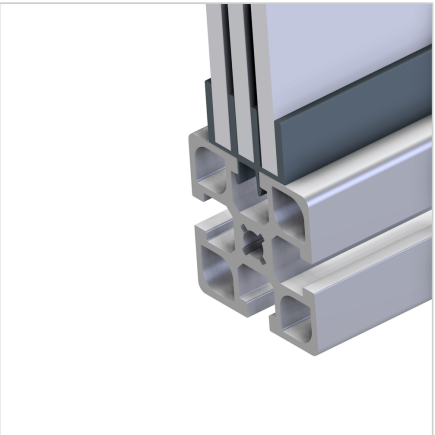

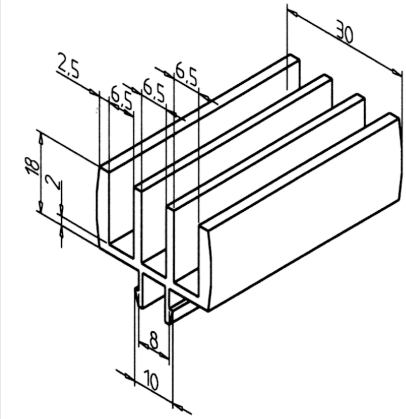


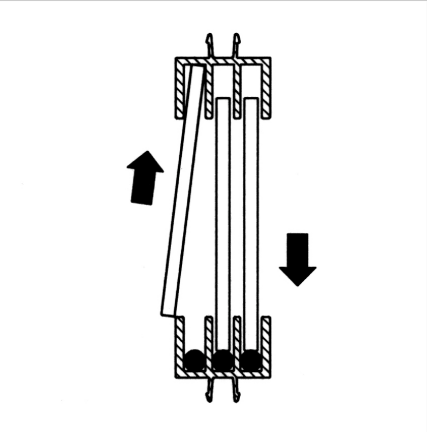

## Technical data/items supplied

- PVC, extruded, grey
- On request also available in black, **part no.** 221075/0
- Weight = 0.340 kg/m
- Bar length = 2 m

## Applications

- 3-fold sliding window made of surface elements up to 6 mm thick

## Assembly

- Press into profile groove
- Suitable for subsequent mounting
- For retrofitting the surface elements must be inserted in the grooves of the lower guide profile round rods **part no.** 221077/0
- Determination of dimensions for surface elements for subsequent mounting: Light height- 20 mm, further light height - 10 mm