+386 (0)59 071 390
prodaja@minitec.si
24.11.2026

INNER ANGLE CABLE DUCT 45

Code: 221118/1

Edge protection for conduit 45, preventing edge damage and extending duct lifespan.

Link to the product →

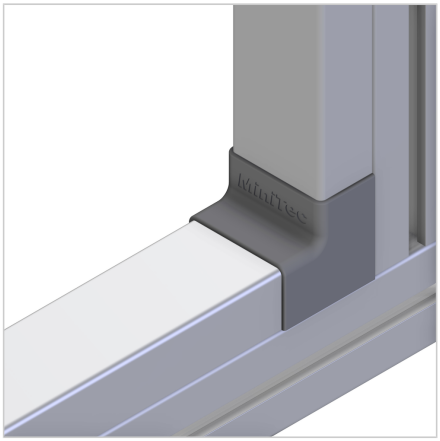

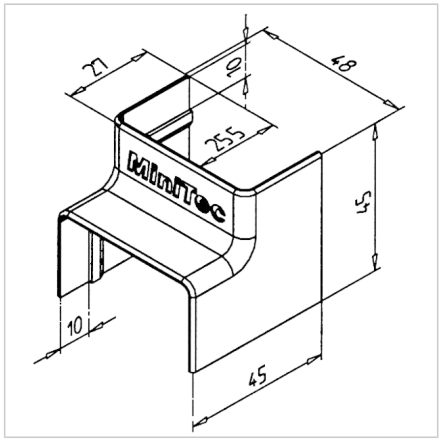

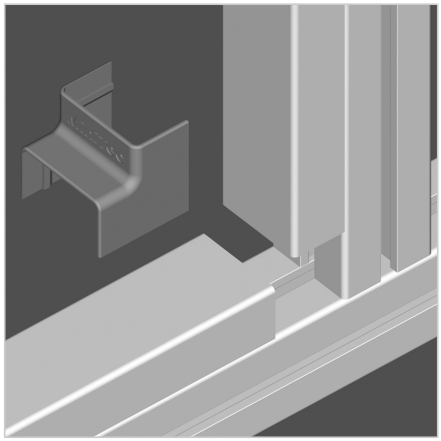

Technical data/items supplied

- ABS, Injection Mould, grey
- Weight = 0.010 kg/piece

Applications

- Connecting cable canal 45 AL to internal angles

Assembly

- Clip the first side of cable duct on clamps.
- Insert the angle
- Clip on the second side of the cable duct and push until it stops