+386 (0)59 071 390
prodaja@minitec.si
20.12.2025

MOUNTING SYSTEM TOP 40

Code: E10070/0

Link to the product →

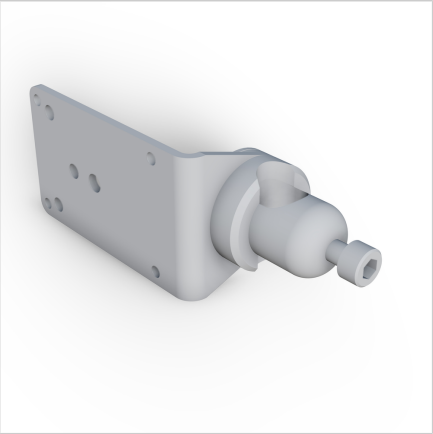

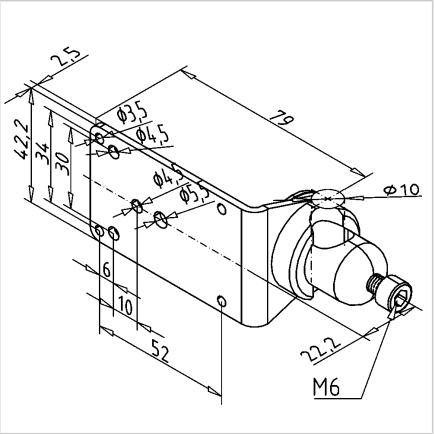

Technical data/items supplied

- Aluminium + steel
- Weight = 0.120 kg/piece