+386 (0)59 071 390
prodaja@minitec.si
26.11.2026

POWER LOCK FASTENER 45 SF SHORT

Code: 210020/0

Power-lock fastener 45 SF (short version) for quick and strong aluminium profile connections without machining.

Link to the product →

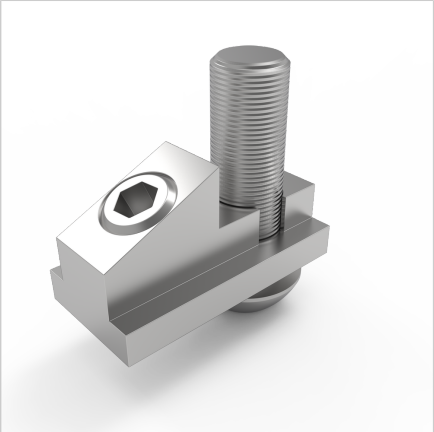

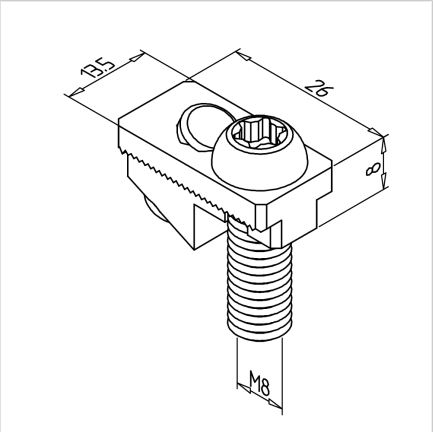

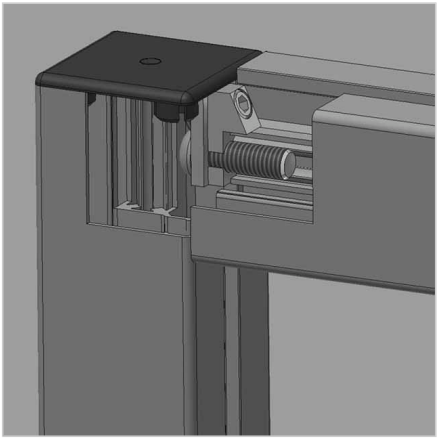

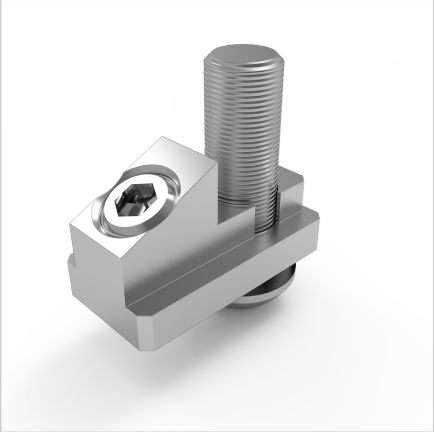

Technical data/items supplied

- Steel, galvanized
- Self tapping torx screw T40
- Weight = 0.028 kg/piece

Applications

- Power-lock connection for all profiles, also suitable for crossjoints
- For larger profile sections several fasteners can be used

Assembly

- Use Allen key SW 5 to screw connector into end face of profile
- Tighten the set screw M8 with the wrench SW 4
- Recommended locking torque: 12 Nm