+386 (0)59 071 390
prodaja@minitec.si
25.11.2026

SEALING CAP C-RAIL 30

Code: 320223/0

End cap for C-profile provides a safe and aesthetic finish for the guide profile and prevents tools from falling out of the track.

Link to the product →



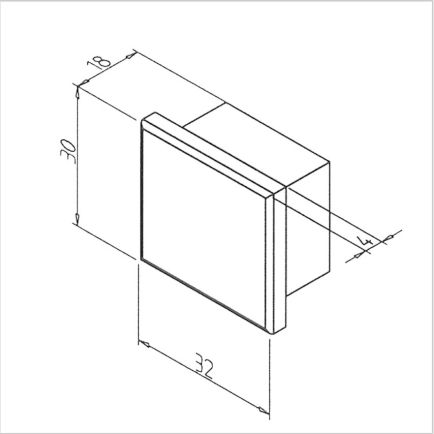



Technical data/items supplied

- Plastic, black
- Weight = 0.006 kg/piece

Applications

- Closing of both rail ends

Assembly

- Press onto C-profile rail