+386 (0)59 071 390
prodaja@minitec.si
24.11.2026

SICHERHEITSSCHALTER BüGEL AZM 161-B6

Code: 211766/2

Safety switch bracket AZM 161-B6 for efficient mounting and safe use of safety switches.

Link to the product →



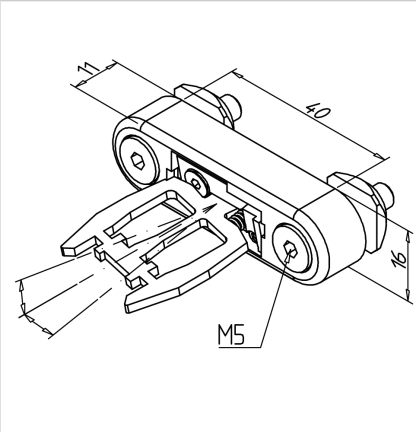

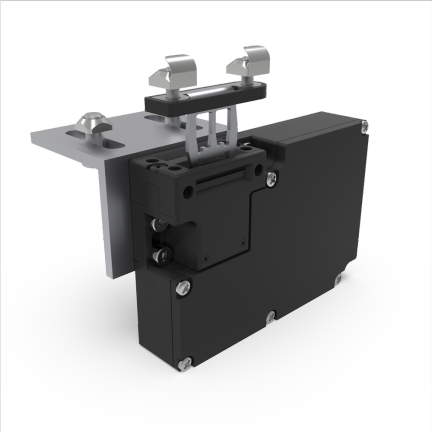

Technical data/items supplied

- Movable actuator
  Operating radius in longitudinal and transverse direction min. 95 mm
- Weight = 0.049 kg/piece

Applications

- Operating handle for small operating radii in conjunction with safety switch **part no.** 211110/0, replaces the standard strap

Assembly

- Fasten with fastening material to profile groove
- Directly on panel element with countersunk screws M5 according to material thickness