+386 (0)59 071 390
prodaja@minitec.si
23.11.2026

SLIDE BAR 8 - 45

Code: 221088/3

Slide rail 8 - 45 enables smooth operation, firm support of workpieces, and accurate guidance for lifting doors and pull-outs in various setups.

Link to the product →



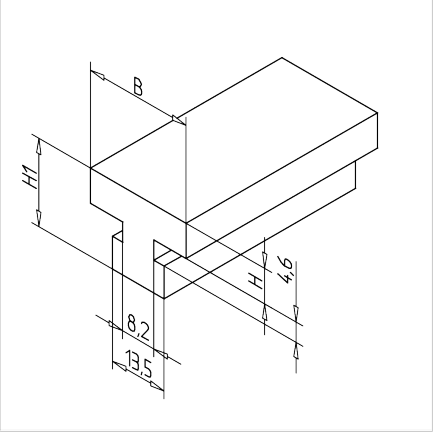



Technical data/items supplied

- PE-UHMW, machined, black
- W = 45 mm
  H = 8 mm
  H1 = 18 mm
- Weight = 0.463 kg/m
- Bar length = 2 m

Applications

- Sliding support
- Workpiece bearing
- Guide for lifting doors
- Slides

Assembly

- Slide into profile groove
- To reduce friction in moving parts, we recommend using the slide rail in short pieces with a maximum length of 100 mm