+386 (0)59 071 390
prodaja@minitec.si
24.11.2026

T-SLOT BAR 135 H

Code: 210987/0

T-slot bar 135 H made from stainless steel for aluminium profile extensions and fastening roller elements in slide LW. Durable and precise movement.

Link to the product →



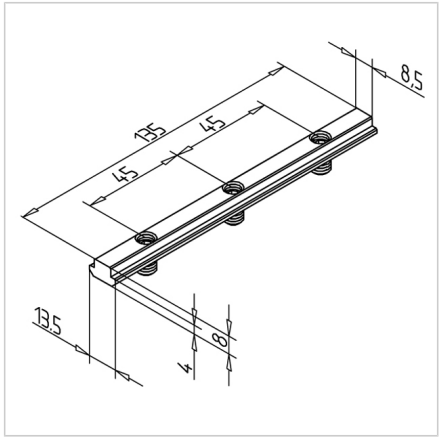



Technical data/items supplied

- Stainless steel
- 3 set screws M8, with hexagonal socket SW4
- Weight = 0.090 kg/piece

Applications

- Profile extension
- Fastening of roller elements in slide LW

Assembly

- Swing into profile groove
- Clamp with set screw
- No machining required
- For larger profile cross sections or higher loads, several clamping strips must be used
- By fixing the setscrews, the T-slot bar fits tight in the area of the groove sides