+386 (0)59 071 390
prodaja@minitec.si
04.02.2026

T-SLOT BAR 140

Code: 280026/0

T-slot bar 140 for aluminium profile extensions and fastening roller elements in slide LW. Durable and easy to install for precise movement.

Link to the product →

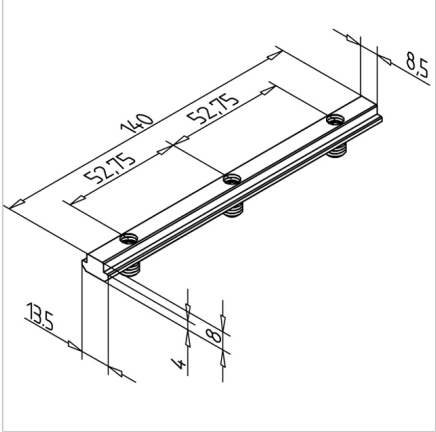

Technical data/items supplied

- Steel, galvanized
- 3 set screws M8, with hexagonal socket SW4
- Stainless version **part no.** 280030/0
- Weight = 0.096 kg/piece

Applications

- Profile extension
- Fastening of roller elements in slide LW
- Fastening of pulleys in linear slide LW 32 E

Assembly

- Swing into profile groove
- Clamp with set screw
- No machining required
- For larger profile cross sections or higher loads, several clamping strips must be used
- By fixing the setscrews, the T-slot bar fits tight in the area of the groove sides