+386 (0)59 071 390
prodaja@minitec.si
24.11.2026

TIMING BELT PULLEY T90 _19 STAINLESS FEATHER KEY 6 MM

Code: 280045/5

Timing belt end piece T90 _19 stainless for precise and reliable motion transmission in linear guides.

Link to the product →



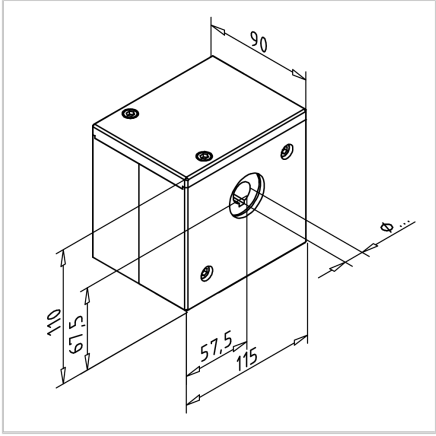

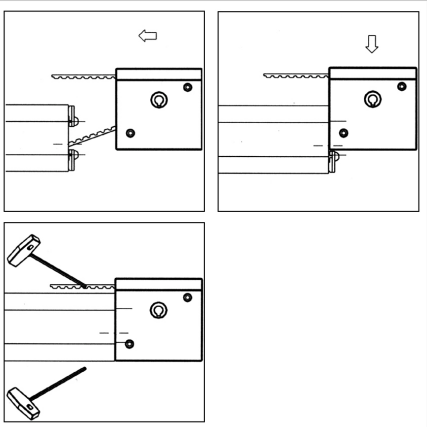

Technical data/items supplied

- Housing 3-piece, anodized aluminum
- Connecting elements in stainless steel
- Aluminum pulley with stainless steel flanges for timing belt 32AT10
  19 teeth, effective diameter 60.48 mm
  Required toothed belt length within the deflection 210 mm
  max. torque 130 Nm
- Pulley with bore 19 mm and feather key groove 6 mm
- 2 ball-bearings
- Weight = 2.800 kg/piece

Applications

- All MiniTec linear guides

Assembly

- Make thread M8 in both ends of the rail, screw in power-lock fastener **part. no.** 211018/1
- Guide the timing belt through the reverse unit
- Insert pulley unit from top
- Tighten power-lock fastener
- Tighten the timing belt