+386 (0)59 071 390
prodaja@minitec.si
04.02.2026

WORKPIECE CARRIER DOUBLE JOINT SWIVEL CANTILEVER

Code: 320510/0

Tooling plate on holder provides organized tool storage, easy access, and a tidy, efficient workstation.

Link to the product →

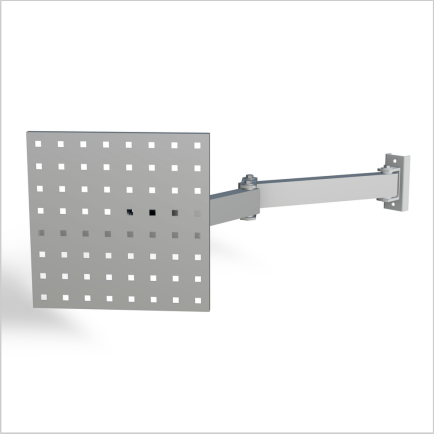

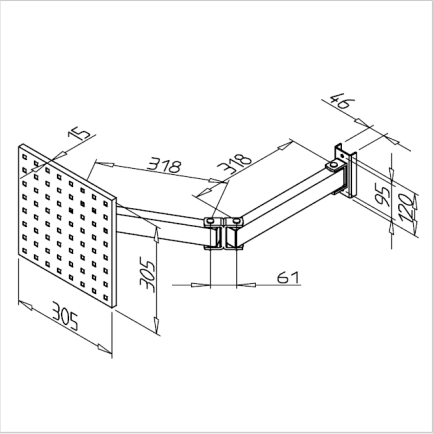

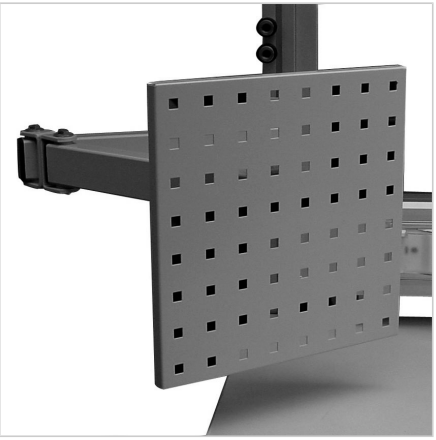

Technical data/items supplied

- Steel, powder-coated, grey
- Square hole perforation 10 x 10 mm at 38 mm grid pattern
- Fastening material
- Load capacity 150 N
- Weight = 4.100 kg/piece

Applications

- For tool holders in gripping reach
- Provision of tools at workplace

Assembly

- Fasten to the portal structure